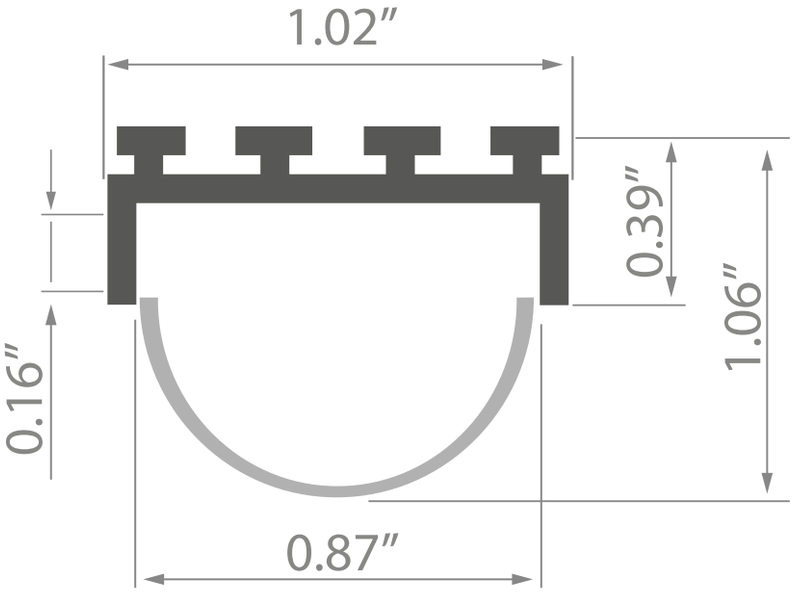
1.02″
0.39″
1.06″
0.16″
0.87″