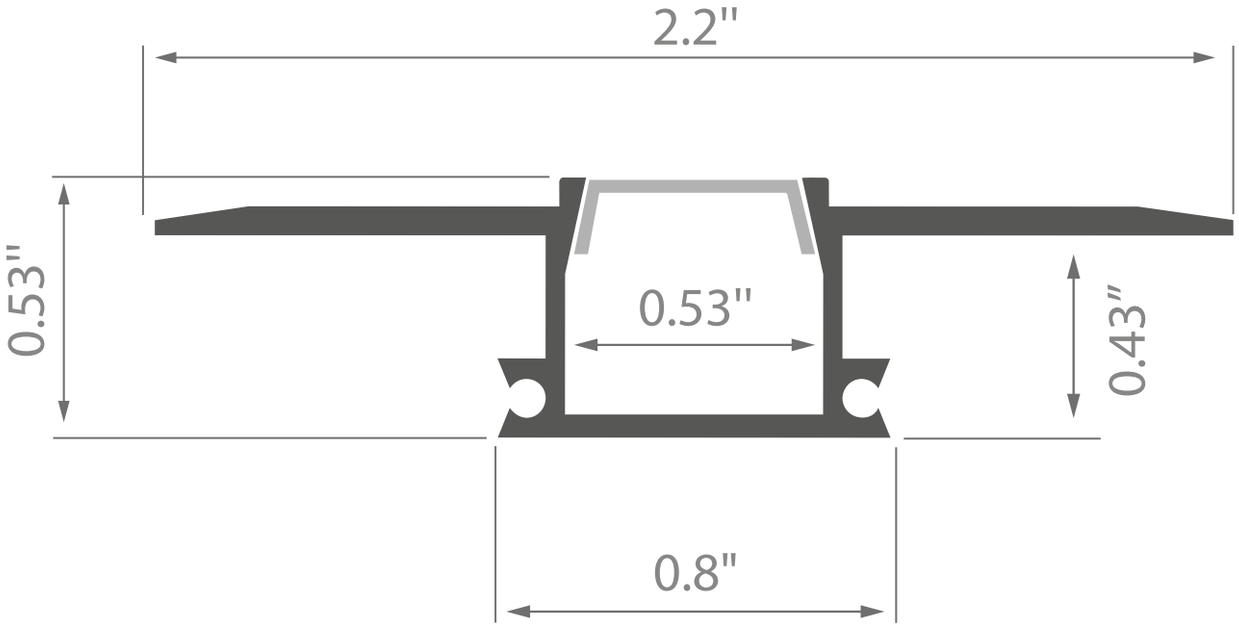
2.2"
0.53"
0.53"
0.43"
0.8"