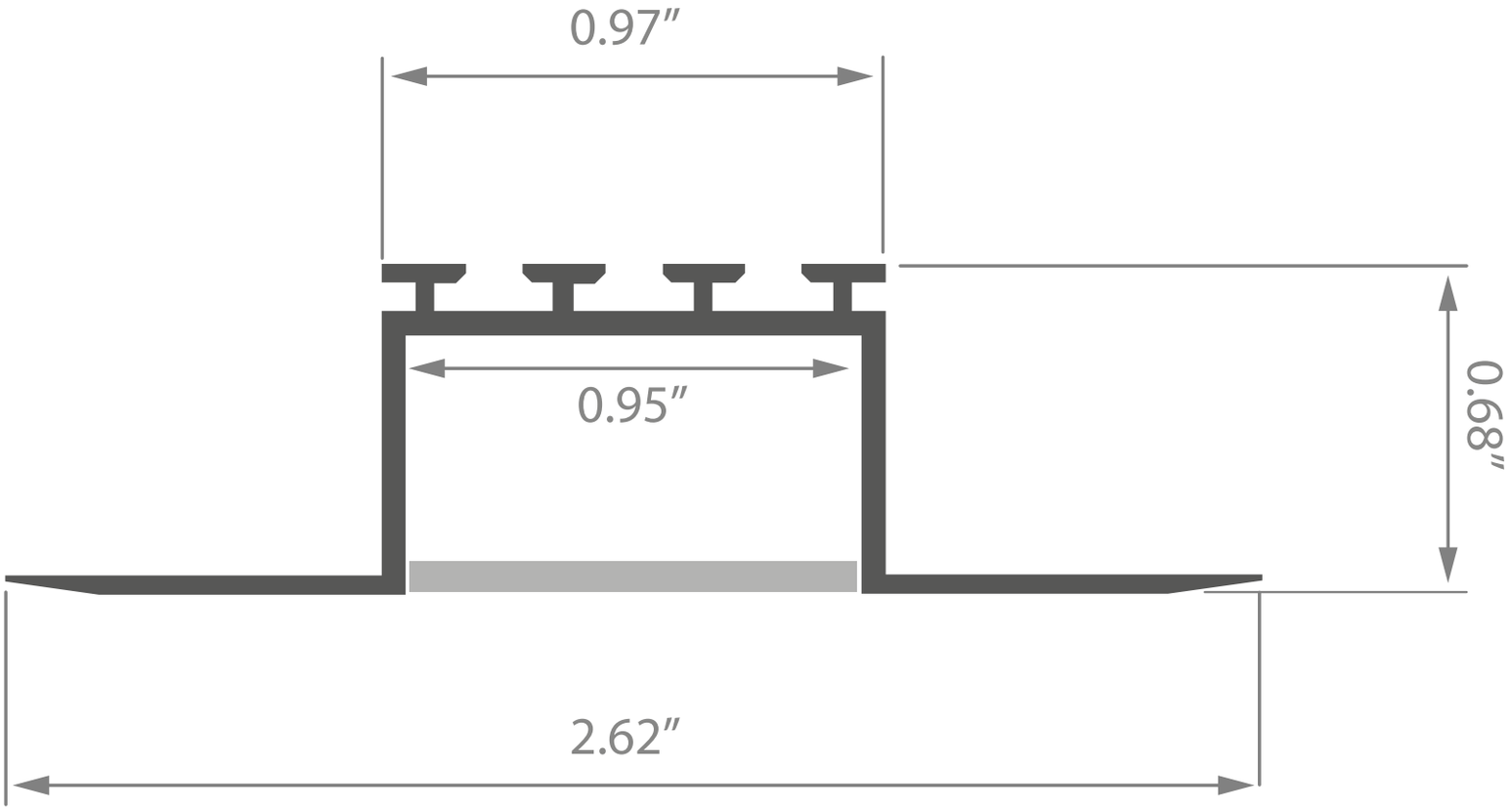
0.97″
0.95″
0.68″
2.62″