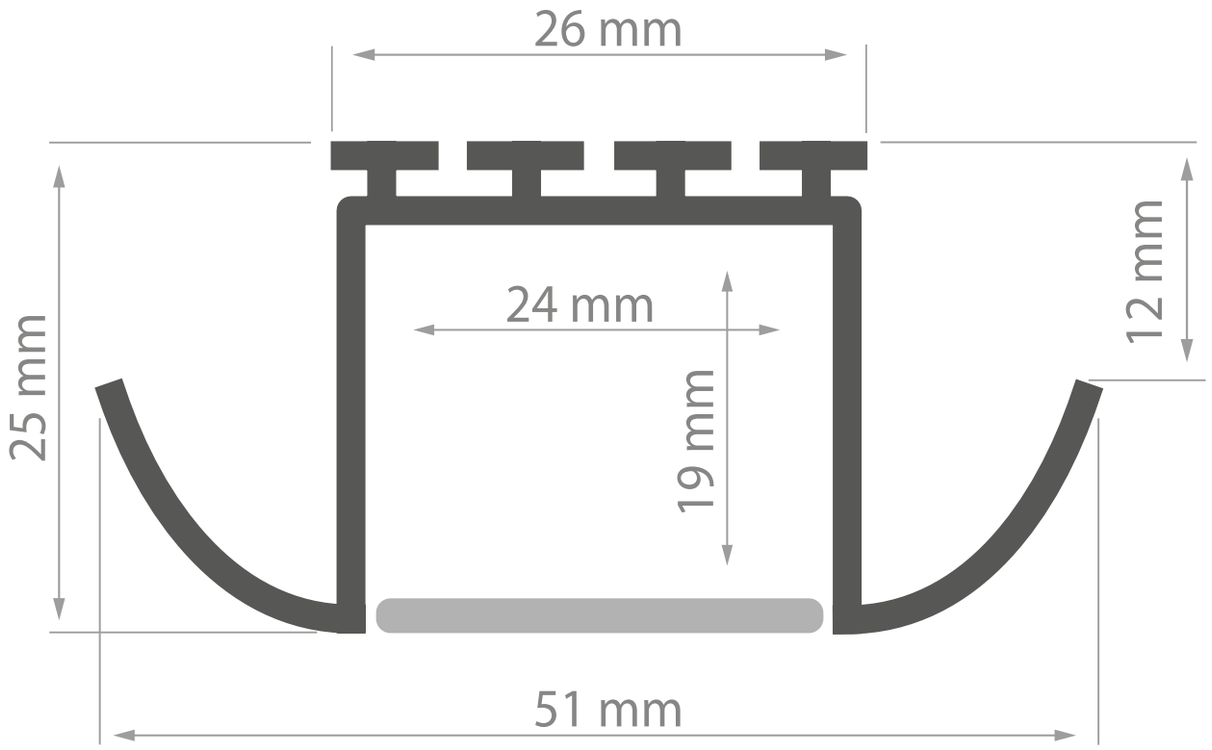
26 mm
24 mm
12 mm
25 mm
19 mm
51 mm