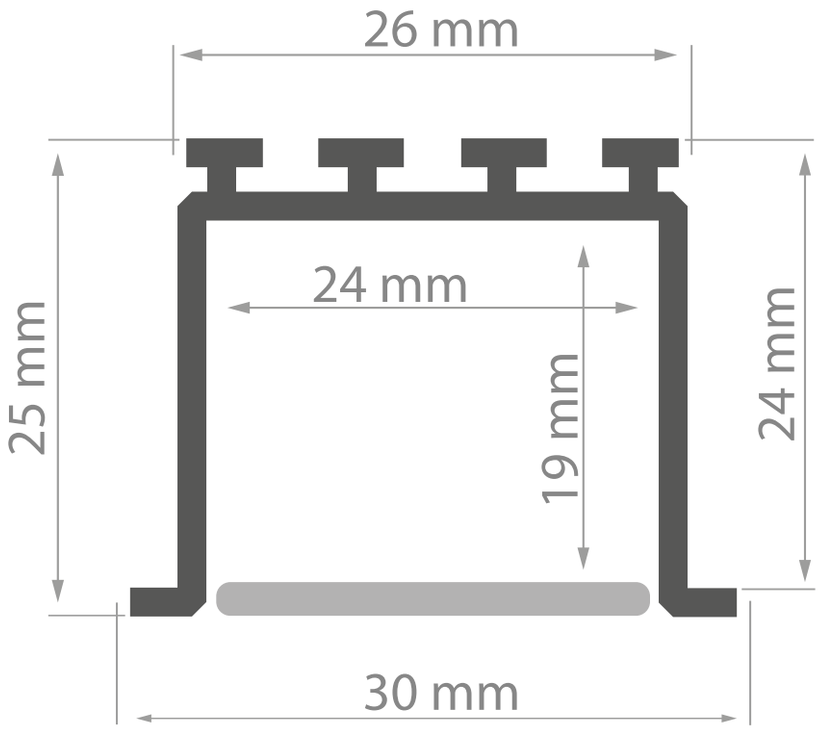
26 mm
24 mm
25 mm
19 mm
24 mm
30 mm