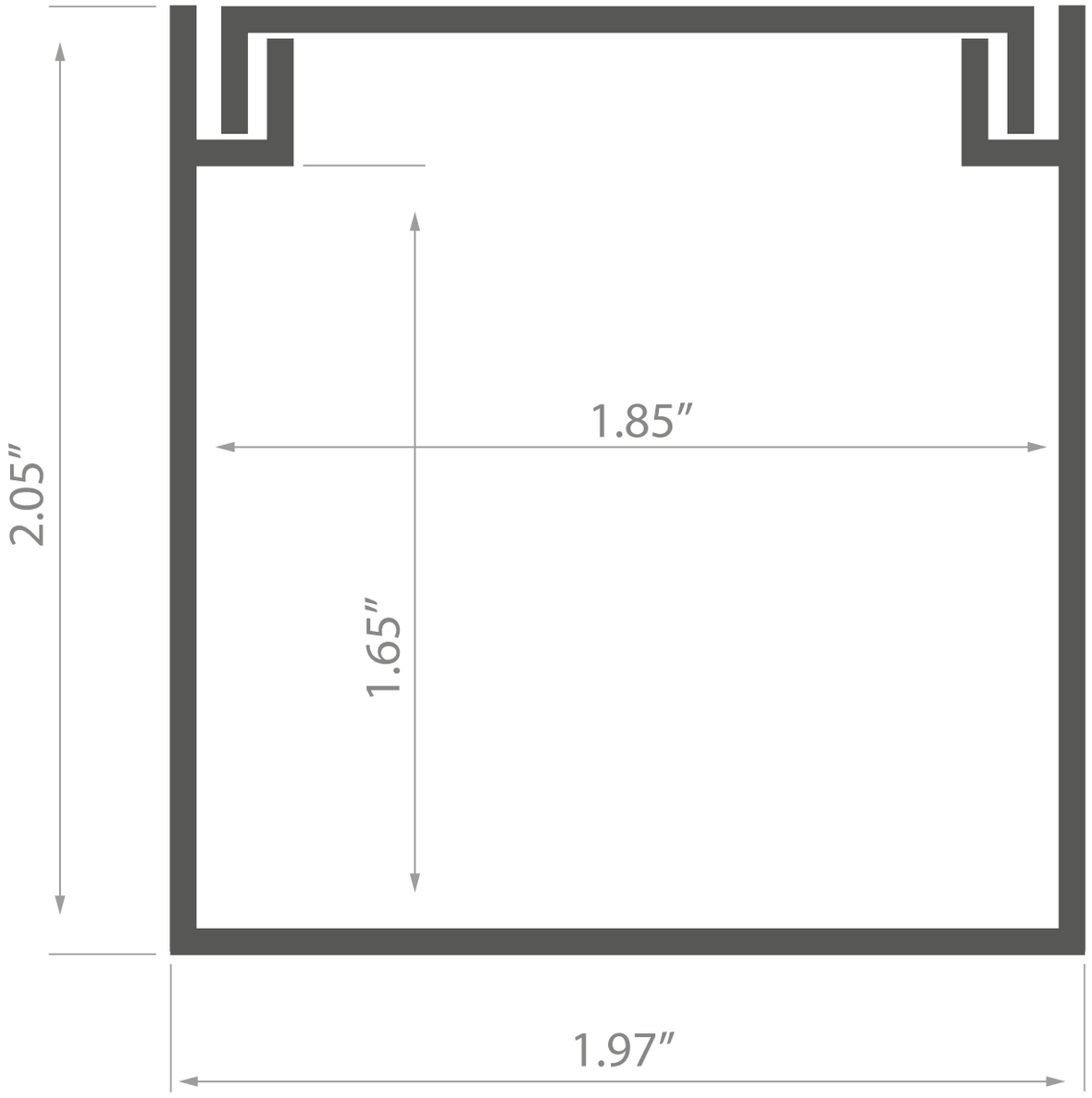
2.05″
1.85″
1.65″
1.97″