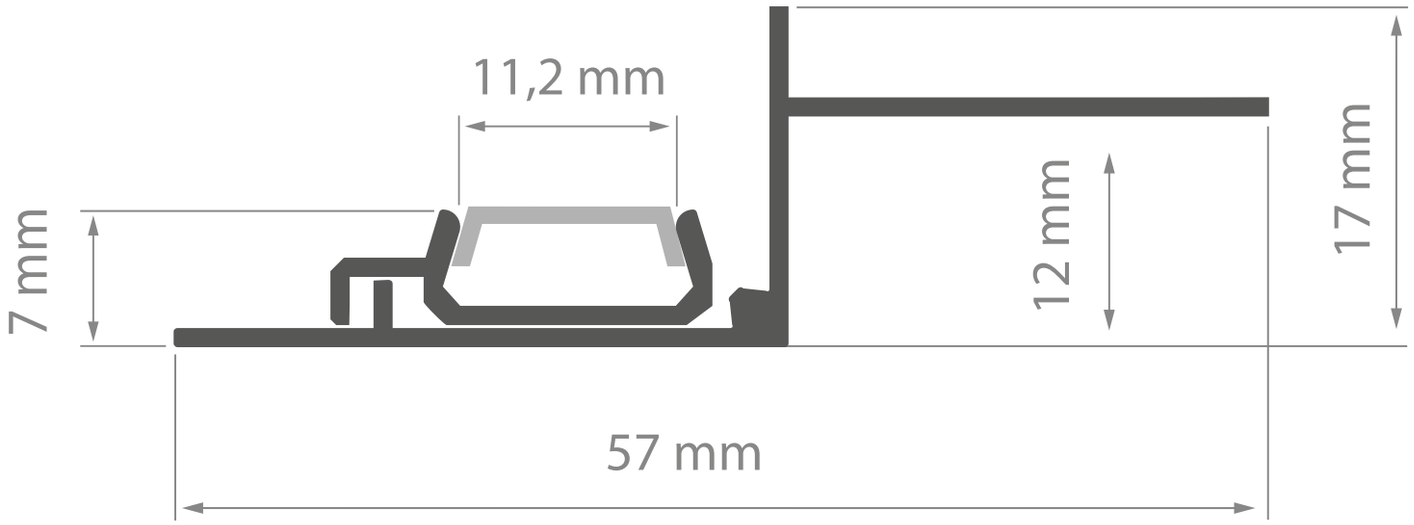
11,2 mm
7 mm
12 mm
17 mm
57 mm