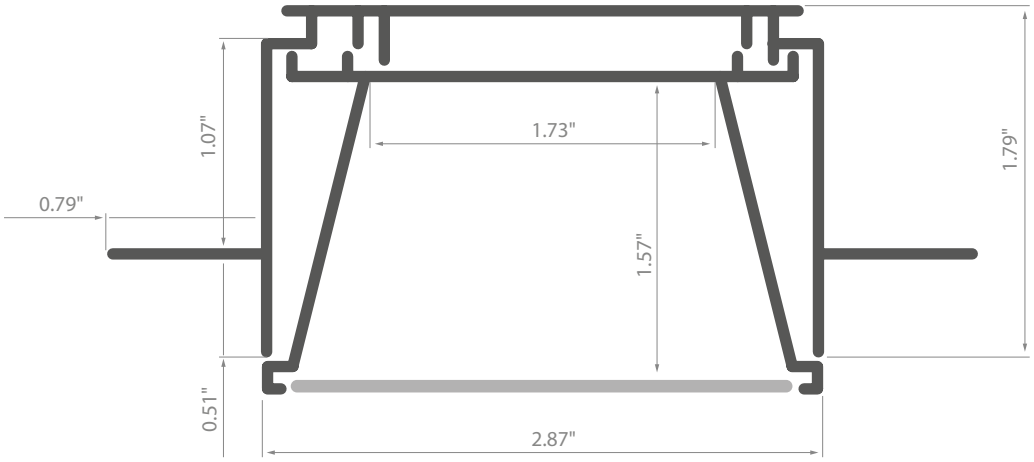
1.07"
1.73"
1.79"
0.79"
1.57"
0.51"
2.87"