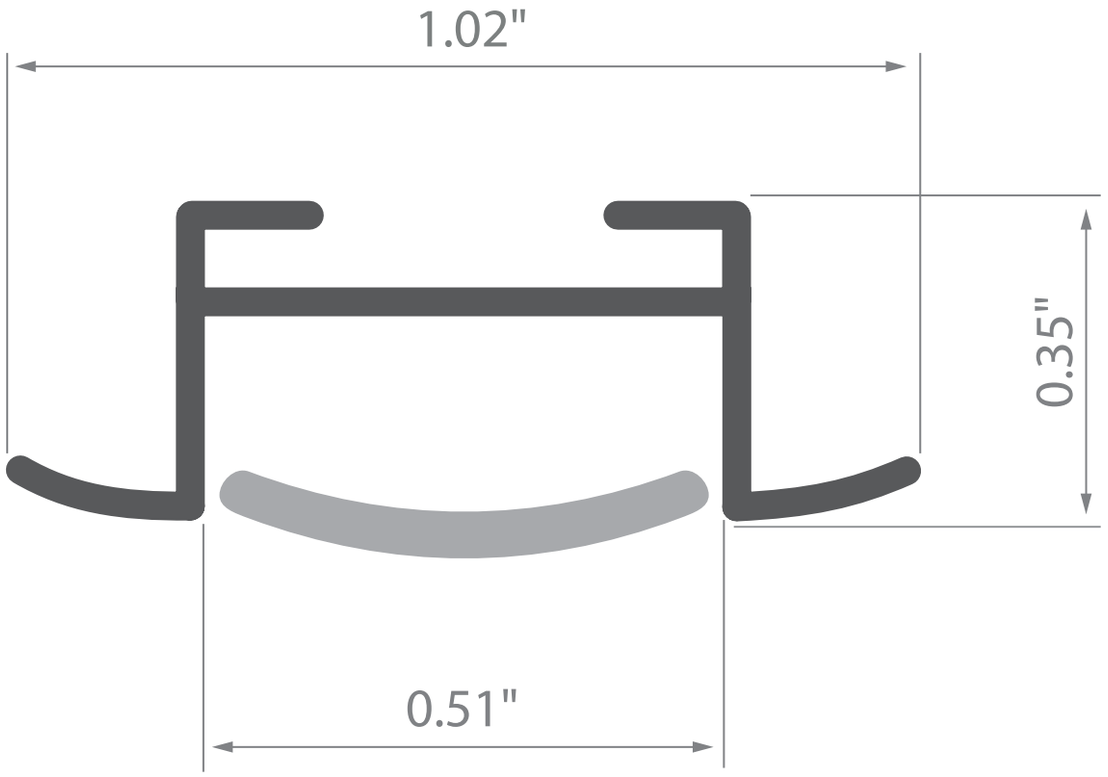
1.02"
0.35"
0.51"